Natural Language Processing Journal 8 (2024) 100100

Contents lists available at ScienceDirect

Natural Language Processing Journal

journal homepage: www.elsevier.com/locate/nlp

# A combined AraBERT and Voting Ensemble classifier model for Arabic sentiment analysis

Dhaou Ghoul [a], Jérémy Patrix [b], Gaël Lejeune [c], Jérôme Verny [d,*]

[a] HF-Lab, HIGHSYS, Paris, France
[b] Opal research, Rouen, France
[c] STIH, Sorbonne Université, Paris, France
[d] NEOMA Business School, Paris, France

ARTICLE INFO

*Keywords:*
Arabic language
Sentiment analysis
Ensemble learning
Machine learning
AraBERT

ABSTRACT

For sentiment analysis of short texts (e.g. movie reviews, tweets, etc.), one approach is to build machine learning models that can determine their tones (positive, negative, neutral). However, these natural language processing (NLP) studies are missing when there is a lack of high-quality and large-scale training data for specific languages such as Arabic. In this paper, we present three machine learning models designed to classify sentiment Arabic tweets developed for a Kaggle competition. We present a Voting Ensemble classifier taking advantage of both character-level and word-level features. We also propose an AraBERT (Arabic Bidirectional Encoder Representations from Transformers) model with preprocessing using Farasa Segmenter. Finally, we combine these first two approaches as a third approach (Voting Ensemble classifier using AraBERT embeddings). Performance measures of results show improvement over previous efforts for all models. The third model exhibits strong performance with a 73.98% F-score score. The work presented here could be useful for future studies and for new Arabic sentiment analysis online services or competitions.

## 1. Introduction

Arabic languages is one of the most widely spoken language in the world, currently considered as the fifth language with more than 422 million speakers (native and non-native),[1] as the official language in more than 22 countries, as the 4th most used language of the Internet (Boudad et al., 2018).

Therefore, it is an important and difficult language to handle for NLP systems, due to many factors including Arabic's complex and rich morphology, its high degree of ambiguity as well as the presence of a number of dialects that vary quite widely (Farghaly and Shaalan, 2009). Its written form is commonly referred as Literary Arabic and divided into two categories: Classical Arabic and Modern Standard Arabic. But Arabic has in fact many variants and research effort have been made on tasks like Arabic Dialects Identification (Abdul-Mageed et al., 2020).

Sentiment analysis involves discerning whether a text is positive, negative, or neutral. Numerous studies aim to enhance the accuracy of sentiment analysis methods, ranging from simple linear models to sophisticated deep neural network models. Furthermore, Arabic varies in its written form based on regional dialects. On the Internet, particularly on social networks, it is prevalent to observe the language expressed in diverse dialects. Additionally, the language is characterized by significant grammatical and semantic ambiguity, complicating the interpretation of the writer's or speaker's intention and emotions.

The NLP community has tackled more intricate tasks, and this paper outlines our involvement in the Kaggle competition's Shared Task on Sentiment Detection in Arabic (Alzahrani et al., 2021). Our focus was on discerning the sentiment (negative, positive, or neutral) of tweets.

This study employs machine learning and NLP techniques to assess sentiment in Arabic tweets. Our objective is to compare the performance of AraBERT (Antoun et al., 2020) and a Ensemble Voting Ensemble Classifier (VEC) in Arabic sentiment detection.

Previous studies utilized hybrid models and homogeneous ensemble learning but did not explore heterogeneous ensembles. In our study, we introduced a heterogeneous ensemble deep learning model to enhance sentiment analysis in Arabic. Our proposed model integrated four distinct ML algorithms: SGD Classifier, Linear SVC, Multinomial NB, and Ridge Classifier. Additionally, we leveraged the pre-trained AraBERT model to boost the model's performance in Arabic sentiment analysis. State-of-the-art approaches have several limitations. Deep learning models demand substantial computational resources for training and inference, resulting in high costs and slow processing times.

* Corresponding author.
*E-mail addresses:* dhaou.ghoul@highsys.fr (D. Ghoul), jeremy.patrix@gmail.com (J. Patrix), gael.lejeune@sorbonne-universite.fr (G. Lejeune), jerome.verny@neoma-bs.fr (J. Verny).

[1] https://www.babbel.com/en/magazine/the-10-most-spoken-languages-in-the-world

https://doi.org/10.1016/j.nlp.2024.100100
Received 20 December 2023; Received in revised form 5 July 2024; Accepted 19 August 2024

2949-7191/© 2024 The Author(s). Published by Elsevier B.V. This is an open access article under the CC BY-NC license (http://creativecommons.org/licenses/by-nc/4.0/).

These models are often "black boxes," making their decision-making processes difficult to interpret and explain. Despite their effectiveness on specific tasks, they may not generalize well to slightly different tasks or domains without further adjustment or retraining.

To address these limitations, our VEC approach using AraBERT embeddings offers the following solutions:

- AraBERT is an optimized and fine-tuned version of BERT tailored for the Arabic language, minimizing the need for extensive computational resources while maintaining high performance on language-specific tasks.
- By utilizing a model pre-trained specifically for the Arabic language, AraBERT optimizes the use of existing linguistic data and minimizes the need for additional annotated data for specific tasks through its transfer learning capabilities.
- AraBERT, having been trained extensively on a large Arabic corpus, is inherently suited to diverse Arabic contexts and dialects, enhancing its generalizability. Furthermore, VEC, being an adaptable classifier, can be fine-tuned for specific tasks without the need for extensive retraining of the underlying model.

The paper is organized as follows: Sections 3 and 4 describe the dataset and the methods we developed. Sections 5 and 6 detail our results, analyses its classification errors, and future directions in Section 7.

## 2. Related work

In this section, we present some of them demonstrating the historical evolution of these approaches with their measured performances.

Arabic sentiment analysis (Baly et al., 2017) focused on the linguistic specificities in Arabic namely morphological richness, ambiguity, and lexical sparsity, which affect the performance. Among all the trained RNTN models (Recursive Neural Tensor Network) evaluated on ARSENTB data (Arabic Sentiment TreeBank). The best RNTN performance was achieved using stems including marking elongation and diacritics with an average F-score on three-way sentiment classification of 74.9%. By not processing the word according to its context, the model had difficulties to correctly classify positive tweets containing words with intensive negative semantics.

To classify Arabic tweets sentiment, an Ensemble model (Heikal et al., 2018) combined CNN (Convolutional Neural Network) and LSTM (Long Short-Term Memory) models after AraVec word embedding (Soliman et al., 2017) (pre-trained on Twitter data following Word2vec approach (Mikolov et al., 2013)) and achieved an F-score of only 64.5% on ASTD data (Arabic Sentiment Tweets Dataset) (Nabil et al., 2015).

An MCE-CNN (Multi-Channel Embedding CNN) (Dahou et al., 2019) "*encodes a combination of different pretrained word embeddings into the embedding block at each embedding channel and trains these channels in parallel. Besides, a separate feature extraction module implemented in a CNN block is used to extract more relevant sentiment features. These channels and blocks help to start training on high-quality Word Embedding Vectors and fine-tuning them*". This model provides a binary Arabic sentiment classification accuracy of 93.9% on balanced HTL data (ElSahar and El-Beltagy, 2015).

An Arabic sentiment classification (Beseiso and Elmousalami, 2020) is based on character-level CNN module and a subword-level Recurrent NN module. The word-embedding layer for the language model has been initialized with Aravec (Soliman et al., 2017) and has been evaluated by a F-score of 96% on ASTD (Nabil et al., 2015) and 95% on LABR datasets.

In Ombabi et al. (2020), a novel deep-learning model assessed sentiment in Arabic. Using a single CNN layer for local features and two LSTM layers for long-term dependencies, it employed SVM for final classification from CNN and LSTM feature maps. FastText word embeddings supported the model. Trained on 15,100 reviews and tested on 4000, the model achieved remarkable 90.75% accuracy.

DeepASA (Deep Arabic Sentiment Analysis) (Alharbi et al., 2021) presented binary sentiment polarities in Arabic text based in Deep Learning. Bojanowski et al. (2016) found that a multiple word embedding model and a FastText model generate the best text representations. DeepASA achieved an accuracy of 83.3% on ASTD data (Nabil et al., 2015) and 94.3% on part of HTL data (hotel reviews) (ElSahar and El-Beltagy, 2015), by classifying again only two classes (positive and negative).

Hadwan et al. (2022) employed sentiment analysis and machine learning on 8000 Arabic user reviews from social media, Google Play, and the app store. Their study revealed the k-nearest-neighborhood (KNN) method achieved the highest accuracy at 78.46% among the various techniques used.

Khabour et al. (2022) introduced a semantic orientation method for determining the polarity of Arabic subjective texts. Their approach incorporates domain ontology and sentiment lexicon to extract and weigh semantic features based on ontology levels and dataset frequencies. Evaluating on a hotel reviews dataset of 15,572 annotated with positive, negative, and neutral classes, the method achieved an overall accuracy of 79.20% and an f-measure of 78.75%.

In Abdelgwad et al. (2022), the authors introduce a BERT architecture with a straightforward linear classification layer. The experimental results on three distinct Arabic datasets show that the model achieved 89.51% accuracy on the Arabic hotel reviews dataset (Pontiki et al., 2016), 73.23% on the human-annotated book reviews dataset (Al-Smadi et al., 2015), and 85.73% on the Arabic news dataset (Al-Sarhan et al., 2016).

Alqarni and Rahman (2023) analyzed Arabic tweets related to the COVID-19 pandemic in Saudi Arabia, collecting data from Riyadh, Dammam, and Jeddah over two time periods. Pre-processing and annotating 90,187 tweets with positive, negative, or neutral sentiments, they used Convolutional Neural Networks (CNN) and Bi-directional Long Short-Term Memory (BiLSTM) for sentiment classification. The experimental results revealed a CNN accuracy of 92.80% and a BiLSTM accuracy of 91.99%.

Musleh et al. (2023) introduces an NLP model for Arabic comment classification using six classifiers (SVM, Naïve Bayes, Logistic Regression, KNN, Decision Tree, and Random Forest) on a dataset of 4212 labeled comments. Achieving 94.62% accuracy and an F-score of 94.62% with Naïve Bayes. The model exhibits strong performance, while Decision Tree shows suboptimal results with 84.10% accuracy and a 84.08% F-score score without TF-IDF.

Umair et al. (2023) employed the AraBERT model to categorize tweets as either negative or positive. The study utilized the AraCOV-19 dataset, comprising Arabic language tweets related to COVID. The experimental findings indicated AraBERT achieved an accuracy of 93% and 92% for positive and negative classification respectively.

Table 1 summarizes the main points extracted from the reviewed papers in this section.

Even though the previously mentioned research works are using various machine and deep learning architectures, the applied text representation methods sush as TF-IDF (defined among our approach) or word embeddings sush as Word2Vec are relatively similar. These models generate embeddings that are context-independent: i.e. there is just one vector representation for each word. The different meanings of the word are combined into one single vector. All authors apply the same preprocessing steps (tokenization, remove stops words, etc.) on their own dataset to improve the performance of their respective models, but encountering to have negative effects once applied on public datasets (such as from competitions). By contrast, our approach (using AraBert) generates embeddings allowing multiple vector representations for the same word (based on the context in which the word is used). Our contribution in this model compared to the previously mentioned models is to reduce the semantic ambiguity by analyzing the word in its context.

**Table 1**
A literature review of Arabic sentiment analysis.

| Author | Data | Model & Technique | Results |
|---|---|---|---|
| Baly et al. (2017) | Arabic sentiment TreeBank | Recursive Neural Tensor Network (RNTN) | F-score = 74.9% |
| Heikal et al. (2018) | ASTD Data | CNN & LSTM with AraVec word embedding | F-score = 64.5% |
| Dahou et al. (2019) | HTL Data | Multi-Channel Embedding CNN | F-score = 93.9% |
| Beseiso and Elmousalami (2020) | ASTD data & LABR data | character-level CNN module and a subword-level Recurrent NN | F-score: 96% on ASTD data & 95% on LABR data |
| Ombabi et al. (2020) | 15,100 reviews provided by other previous published work | FastText (Skip-gram)-CNN–LSTM | F1-Score = 92.44% |
| Alharbi et al. (2021) | HTL data (hotel reviewers) & ASTD data | Deep learning model with FastText | F-score = 83.3% on ASTD data & 94.3% on HTL data |
| Hadwan et al. (2022) | 8000 reviews from social media, Google Play, and the App store | KNN | F-Score = 78.96% |
| Khabour et al. (2022) | 15,572 reviews provided by other previous published work. | Semantic orientation approach using ontology | F-Score = 78.75% |
| Abdelgwad et al. (2022) | Three datasets: HAAD dataset, Arabic news dataset and Arabic Hotel Reviews Dataset. | BERT model | Accuracy = 73.23% on HAAD dataset, 85.73% on Arabic news and 89.51% on Arabic Hotel reviews. |
| Alqarni and Rahman (2023) | Several datasets used with a total of 90,187 preprocessed tweets from Twitter. | CNN | F-Score = 92.99% |
| Musleh et al. (2023) | 4212 comments from collected from YouTube | Naïve Bayes (NB) without incorporating TF-IDF | F-score = 94.62% |
| Umair et al. (2023) | AraCOV-19 data | AraBERT | 93% and 92% accuracy for positive and negative classification respectively. |

**Table 2**
Size of the Train, Dev and Test sets.

| Tweets | Train | Dev | Test | Total |
|---|---|---|---|---|
| Positive | 6119 | 2690 | 3 150 | 11 971 |
| Negative | 6227 | 2622 | 3 252 | 12 072 |
| Neutral | 26 154 | 11 188 | 13 598 | 50 957 |
| Total | 38 500 | 16 500 | 20 000 | 75 000 |

## 3. Data

Our dataset is the ASAD data (Alharbi et al., 2020) including a dataset of 55k tweets. We used 30% as a development set and tested our models on a separate 20k tweets such as shown in Table 2 statistics about ASAD data:

Among the total of 11,971 positive tweets, 12,072 negative tweets and 50,957 neutral tweets, we present some labeled texts:

- **Positive**: لدي ّ أخت تعادل مليون نجمة في السماء (*I have a sister equal a million stars in the sky*)
- **Negative**: شيئان يحرمانِنا مِن السعادة: العيش في الماضي، ومُراقبة الآخرين (*Two things deprive us of happiness: living in the past and observing others*)
- **Neutral**: أنا بنت مقيمة عندي رخصة القيادة دولية، هل هي سارية المفعول بالسعودية؟ (*I am a resident girl and I have an international driving license, is it valid in Saudi Arabia?*)

## 4. Methods developed for sentiment classification

Firstly (in 4.1), we present a VEC taking advantage of both character-level and word-level features. Secondly (in 4.2), we develop an AraBERT model with preprocessing. Finally (in 4.3), We integrate the VEC with the AraBERT model.

### 4.1. Voting ensemble classifier with word and character-level features

We use the method developed for the 2020 NADI challenge (Nuanced Arabic Dialect Identification for tweets) developed by Ghoul and Lejeune (2020) based on a VEC with words and character level features. To build and train the model, we used the FeatureUnion integrated in Scikit-Learn[2] (Pedregosa et al., 2011) which allows to combine different n-gram[3] representations at the word level and the character level as shown in Fig. 1 (where $w = 0.5$ represents the transformer or classifier weights). To train this model, we concatenate three vectors with the following features (weigthed with TF-IDF[4]): word n-grams (1 to 5-grams), character n-grams (1 to 4-grams) and character n-grams inside words (1 to 5-grams). In this method, we use a set of known classifiers to build a VEC that uses predicted class labels for majority rule voting. This Ensemble is a combination of the following classifiers (where *pen* stands for *penalty*):

- SGDClassifier ($\alpha$[5] = $10^{-5}$, pen[6]='l2') (Tsuruoka et al., 2009): "*Stochastic Gradient Descent is a simple yet efficient optimization algorithm used to find the values of parameters / coefficients of functions that minimize a cost function. It is used for discriminative learning of linear classifiers under convex loss functions such as SVM and Logistic regression.*"

[2] https://scikit-learn.org/

[3] A contiguous sequence of $n$ items (words or characters) from a given sample of text.

[4] Term Frequency–Inverse Document Frequency, is a statistic intending to reflect how important a word is with respect to its distribution in a corpus.

[5] A constant that multiplies the regularization term. The higher the value, the stronger the regularization. Also used to compute the learning rate when set to learning rate is set to 'optimal'.

[6] The penalty (aka regularization term) to be used. Defaults to 'l2' which is the standard regularizer for linear SVM models. 'l1' and 'elasticnet' might bring sparsity to the model (feature selection) not achievable with 'l2'.

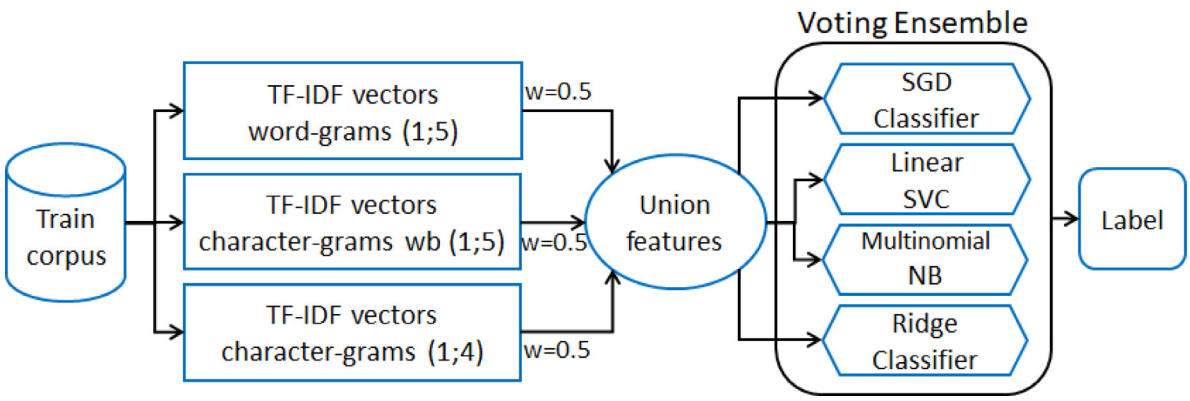


**Fig. 1.** Our model of the VEC.

- LinearSVC (pen='l2', Tolerance[7]= $10^{-3}$): "*Linear Support Vector Classifier, projects the P-dimension dataset into other dimensions for a better separation by a linear kernel (a transform function).*"
- MultinomialNB ($\alpha = 10^{-2}$): "*The multinomial Naive Bayes classifier is suitable for classification with discrete features (e.g., word counts for text classification).*"
- Ridge Classifier ($\alpha = 1$): "*based on Ridge regression method, converts the label data into [−1, 1] and solves the problem with regression method. The highest value in prediction is accepted as a target class and for multiclass a data multi-output regression is applied.*"

In our experience, the selection of the different parameters (w, n-grams, pen, $\alpha$, etc.) was made after several tests. We also tested other classifiers (k-nearest neighbors Classifier, Random Forest Classifier, AdaBoost Classifier). The addition of these classifiers gives a less efficient result. The cost of a test on a computer equipped with 16 Gb of memory is between 6 and 20 min.

### 4.2. AraBERT model with Farasa segmenter

In this section, we present the process to build a deep learning system of sentiment classification. The process is divided into steps: (1) data preprocessing of tweets to filter stopwords, (2) embedding vectors from preprocessed data, (3) learn to classify sentiment on the pretrained model AraBERT got from Antoun et al. (2020) with vectors as inputs.

#### 4.2.1. Data pre-processing: Tokenization

Tokenization is the process that split a text into tokens (words usually). These tokens can be used directly to get a vector representation of term frequencies or fed into a morphological transducer or POS[8] tagger for further processing. The tokenizer is responsible for defining word boundaries, demarcating clitics, multiword expressions, abbreviations and numbers (Attia, 2007). Tokenization is a crucial step to preprocess the Arabic language. For instance, the article "ال -Al" (the) is always prefixed to other words, it is not an intrinsic part of that word. In other hands, words can have different forms (with and without "Al") and share the same meaning. So, using the baseline tokenization, we get some duplicates in the vocabulary, leading to a significant amount of unnecessary redundancy such as المطار-AlmaTAr (airport), مطار-maTAr (airport). To resolve this problem, we used the Farasa (Abdelali et al., 2016) to segment the words into stems,[9] prefixes and suffixes like "الكتابة'AlkitAba" into "ال+كتاب+ـة-Al+KitAb+a".

#### 4.2.2. AraBERT and system settings

AraBERT (Antoun et al., 2020) is a language model that is inspired from the Google's BERT architecture. Six variants of the same model are available for experimentation: AraBERTv0.2-base, AraBERTv1-base, AraBERTv0.1-base, AraBERTv2-large, AraBERTv0.2-large, and AraBERTv2-base. These different versions have been tested and evaluated on a similar task. Our best performing model was AraBERTv2-base (Wadhawan, 2021) that we used in our experiment. To fetch the pretrained AraBERT model, we used the Hugging-Face API[10]. With over 10,000 models trained in over 160 languages, Hugging Face offers the largest and most diverse library of state of the art models, and the Inference API makes them all available to you via API calls.[11] We refine these models on the training split with the following hyper parameters:

- Optimizer Type: "adamw".
- Learning Rate: 2e-5.
- Schedule Type="warmup_linear".
- Batch Size: 32.
- Maximum Sequence Length: 128.
- # Epochs: 5.

To justify our choice of parameters, we tested several combinations of parameters, the following combination have been tested, but they ended up with bad results:

- Optimizer Type: "adam".
- Batch Size: 64/128.
- Maximum Sequence Length: 64/256.
- # Epochs: 3/6.

The model is evaluated after each epoch, the performance evidence according to the parameters is exhibited demonstrated in the next section. Finally, the performance evidence of its parameters will be demonstrated in the next section.

[7] Stopping criteria of any optimization algorithm.

[8] Part-of-speech tagging is the process of marking up a word in a text corresponding to a part of speech

[9] Part of a word before adding or left after removing one or more prefixes or suffixes.

[10] https://huggingface.co/transformers/

[11] The API provides the six variants of AraBERT models by the names of bert-base-arabertv02, bert-base-arabert, bert-base-arabertv2, bert-base-arabertv01, bert-large-arabertv2, and bert-large-arabertv02.

**Table 3**
Results of our methods for sentiment classification in different training configurations (the best results are in bold).)

| Method | Trained on | Tested on | Macro P.[a] | Macro R.[b] | Macro F.[c] | Acc.[d] |
|---|---|---|---|---|---|---|
| Baseline | Train Set | Dev Set | 70.14% | 68.45% | 69.31% | 74.35% |
| Model | Train + Dev | Test Set | 69.55% | 66.73% | 68.11% | 73.12% |
| Voting | Train Set | Dev Set | 77.68% | 70.13% | 73.25% | 81.33% |
| Ensemble | Train + Dev | Test Set | 75.96 | 70.02 | 72.84% | 80.66% |
| AraBERT | Train Set | Dev Set | 71.34% | 71.19% | 71.26% | 79.22% |
| Pre-trained | Train + Dev | Test Set | 77.23% | 70.35% | 73.66% | 81.76% |
| AraBERT + | Train Set | Dev Set | 77.69% | 70.23% | 73.77% | 81.32% |
| Voting Ensemble | Train + Dev | Test Set | **78.01%** | **70.36%** | **73.98%** | **81.34%** |

$Precision = \frac{TP}{TP+FP}$ $Recall = \frac{TP}{TP+FN}$ $F-score = 2 \cdot \frac{Precision \cdot Recall}{Precision+Recall}$.

[a] The macro-averaged *Precision*: measures the average precision per class.
[b] The macro-averaged *Recall*: measures the average recall per class.
[c] The macro-averaged *F-score*: is used to assess the quality of problems with multiple binary labels or multiple classes.
[d] *Accuracy* is the percentage of correct predictions for the test data.

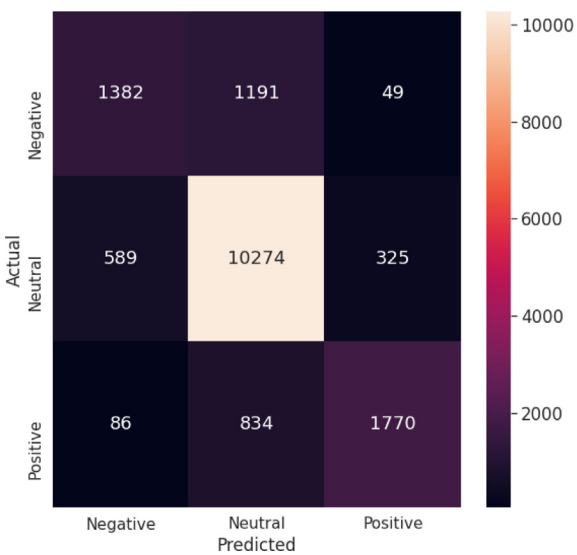


**Fig. 2.** Confusion matrix on the sentiment dev set for the VEC using AraBERT embeddings.

### 4.3. VEC using AraBERT embeddings

In this section, we introduce a method that merges two initial approaches: the VEC and AraBERT. This method leverages the advanced contextual representations of AraBERT with the robustness of model ensemble techniques for Arabic text classification. AraBERT, an Arabic-specific adaptation of BERT, produces high-quality embeddings that encapsulate the syntactic and semantic nuances of the Arabic language. These embeddings are used to train various classification models, including SVMs, random forests, and neural networks. The predictions from these models are then aggregated using a voting classifier, employing either hard or soft voting methods, to achieve a more robust and accurate final decision. This approach harnesses the depth of contextual embeddings and the enhanced robustness of model ensembles, leading to improved performance in Arabic text classification tasks. The implementation of the VEC using AraBERT embeddings is divided into several stages, from data preparation to the final model assembly.

**Table 4**
Classification report for the VEC using AraBERT embeddings on the dev set (accuracy: 81.34%).

| | *Precision* | *Recall* | *F-score* |
|---|---|---|---|
| NEG | 66.97% | 52.76% | 59.02% |
| NEU | 83.57% | 91.77% | 87.48% |
| POS | 82.61% | 65.97% | 73.36% |
| Macro | 77.69% | 70.13% | 73.77% |
| Micro | 80.77% | 81.34% | 81.05% |

- Tokenization: Segment the text into words or subwords using a tokenizer tailored for AraBERT.
- Standardization: Standardize word forms to handle spelling variations.
- Loading AraBERT: Use a pre-trained AraBERT model.
- Embedding Extraction: Pass sentences or documents through AraBERT to obtain contextual vector representations.
- Model Selection: Choose several classification algorithms (SGD Classifier, Linear SVC, Multinomial NB, and Ridge Classifier).
- Model Training: Train each model on the embeddings generated by AraBERT.
- Evaluate the performance of the ensemble on metrics such as precision, recall, F1-score, and accuracy.

## 5. Results and discussion

For this work, we use three methods: VEC with word and character-level features, AraBERT model with Farasa segmenter and VEC using AraBERT embeddings. Table 3 shows that according to Macro F-*measure* (unweighted mean of each class F-measure). The best model is the VEC using AraBERT embeddings with an F-score (POS, NEG and NEU) of 73.98%. The final performance is measured on the test sample while the model is optimized with respect to the dev set in order to prevent overfitting.

In Fig. 2, the confusion matrix on the dev set shows that negative tweets were harder to predict with only 1382 TP (true positives), 683 FP (false positives) and 1240 FN (false negatives). The confusion matrix also shows that positive tweets were not easy predicted with only 1774 TP, 374 FP and 916 FN. The prediction difficulties are due to the imbalance data (~6000 tweets of positives and negatives tweets vs 26 000 neutral tweets) (see Table 4).

## 6. Preprocessing advices about tweets from a Kaggle competitor

In this section, we analyze only the classification errors of VEC using AraBERT embeddings. The Fig. 2 shows the confusion matrix of our best configuration. In our work, we decide to not make data preprocessing such as remove stop words, repeated characters, etc. After careful analysis of the samples classified as missed, we found that the performance of VEC using AraBERT embeddings were affected by several factors. First, the wrong labeling of some tweets. The following examples are misclassified tweets:

- "جميلتي 💍 💘 عجَزَ اللسانُ عن البيانِ: يوم عظيم يُوثق فيه عقد قران". (*The tongue was unable to explain: A great day when my beautiful wife's marriage contract is fulfilled* 💍 💘). There have been several instances of misclassified tweets where our classifier was unable to use strong cue words to identify sentiment. Clearly "جميلتي: beautiful, عظيم: great" are strong indicators of positive emotions. المشاكل 🤣 🤣 ما يفهمون انه في شي اسمه كورونا بالدنيا بس يفهمون. (*They do not understand that there is such a thing as Corona in the world, but they understand the problems* 🤣 🤣). This is another misclassified positive tweet. A large indicator of sentiment in many tweets are emoticons such as sad or smiley faces "🤣".

The VEC using AraBERT embeddings was able to predict the classes of those tweets correctly, but the actual labels given for them were wrong. This problem could be a major factor in confuse the model's learning process. We noticed that several tweets had words such as "@huh201", where the @ sign indicates that the tweet is directed at another Twitter user with that monicker. These tokens may not be useful in determining sentiment. As a result, another preprocessing step that we included was to replace "@ ..." with [مستخدم] and url address with [رابط], as they have virtually no effect on the sentiment of a tweet. It appeared that adding TF-IDF and class weighting made this baseline better than the VEC, showing maybe the interest of digging into character-level features.

## 7. Conclusion

In this paper, we described three systems developed for the Sentiment Detection in Arabic. We present an VEC taking advantage of both character-level and word-level features. We also propose an AraBERT model with preprocessing using Farasa Segmenter and a combination of the two first approaches (VEC and AraBERT embeddings) as a third final approach.

We tried to show the interest of combining word-level and character-level features. The results from our all models shown strong performance. However, our best accuracy still leaves room for improvement, which could come in the form of better preprocessing and more clever feature selection. In addition and to improve our results, we will consider collecting much more data, making sure to implement the appropriate preprocessing techniques, we will use other tokenizer such as Byte-level BPE tokenizer from Transformers and Tokenizers (Hugging Face libraries) and we will use some pre-trained word representation models, such MARBERT for the embedding layer.

This classification challenge of sentiment labels represents above all a proof of concept allowing trust from partners of the cosmetics-perfume sector. In terms of future experimentation, we will now try to classify the consumer opinion expressed on products and services within an ongoing research project involving companies from perfume-cosmetic industry in France. Our methodology can be applied for other sectors at the international level allowing researchers and practitioners to better understand consumers preferences and behavioral changes in the post-Covid-19 era.

## CRediT authorship contribution statement

**Dhaou Ghoul:** Writing – original draft, Visualization, Project administration, Methodology, Investigation, Funding acquisition, Formal analysis, Data curation, Conceptualization. **Jérémy Patrix:** Writing – review & editing, Visualization, Validation, Supervision. **Gaël Lejeune:** Writing – review & editing, Validation, Supervision, Methodology. **Jérôme Verny:** Writing – review & editing, Visualization, Validation, Supervision.

## Declaration of competing interest

The authors declare that they have no known competing financial interests or personal relationships that could have appeared to influence the work reported in this paper.

## References


Abdelali, A., Darwish, K., Durrani, N., Mubarak, H., 2016. Farasa: A fast and furious segmenter for arabic. In: Proceedings of the 2016 Conference of the North American Chapter of the Association for Computational Linguistics: Demonstrations. Association for Computational Linguistics, San Diego, California, pp. 11–16. http://dx.doi.org/10.18653/v1/N16-3003.

Abdelgwad, M.M., Soliman, T.H.A., Taloba, A.I., 2022. Arabic aspect sentiment polarity classification using BERT. J. Big Data 9 (1), http://dx.doi.org/10.1186/s40537-022-00656-6.

Abdul-Mageed, M., Zhang, C., Bouamor, H., Habash, N., 2020. NADI 2020: The first nuanced Arabic dialect identification shared task. In: Proceedings of the Fifth Arabic Natural Language Processing Workshop. Association for Computational Linguistics, Barcelona, Spain (Online), pp. 97–110, URL https://www.aclweb.org/anthology/2020.wanlp-1.9.

Al-Sarhan, H., Al-So'ud, M., Al-Smadi, M., Al-Ayyoub, M., Jararweh, Y., 2016. Framework for affective news analysis of Arabic news: 2014 gaza attacks case study. In: 2016 7th International Conference on Information and Communication Systems. ICICS, pp. 327–332. http://dx.doi.org/10.1109/IACS.2016.7476073.

Al-Smadi, M., Qawasmeh, O., Talafha, B., Quwaider, M., 2015. Human annotated Arabic dataset of book reviews for aspect based sentiment analysis. In: 2015 3rd International Conference on Future Internet of Things and Cloud. pp. 726–730. http://dx.doi.org/10.1109/FiCloud.2015.62.

Alharbi, B., Alamro, H., Alshehri, M., Khayyat, Z., Kalkatawi, M., Jaber, I.I., Zhang, X., 2020. ASAD: A Twitter-based benchmark arabic sentiment analysis dataset. CoRR arXiv:2011.00578.

Alharbi, A., Kalkatawi, M., Taileb, M., 2021. Arabic sentiment analysis using deep learning and ensemble methods. Arab. J. Sci. Eng. 46 (9), http://dx.doi.org/10.1007/s13369-021-05475-0.

Alqarni, A., Rahman, A., 2023. Arabic tweets-based sentiment analysis to investigate the impact of COVID-19 in KSA: A deep learning approach. Big Data Cogn. Comput. 7 (1), 16.

Alzahrani, H., Alamro, H., Injijaber, M., Alshehri, M., Barazi, S., 2021. Arabic sentiment analysis 2021 @ KAUST. URL https://kaggle.com/competitions/arabic-sentiment-analysis-2021-kaust.

Antoun, W., Baly, F., Hajj, H.M., 2020. Arabert: Transformer-based model for Arabic language understanding. CoRR URL https://arxiv.org/abs/2003.00104.

Attia, M., 2007. Arabic Tokenization System. pp. 65–72. http://dx.doi.org/10.3115/1654576.1654588.

Baly, R., Hajj, H., Habash, N., Shaban, K.B., El-Hajj, W., 2017. A sentiment treebank and morphologically enriched recursive deep models for effective sentiment analysis in arabic. ACM Trans. Asian Low-Resour. Lang. Inf. Process. 16 (4), http://dx.doi.org/10.1145/3086576.

Beseiso, M., Elmousalami, H., 2020. Subword attentive model for Arabic sentiment analysis: A deep learning approach. ACM Trans. Asian Low-Resour. Lang. Inf. Process. 19 (2), http://dx.doi.org/10.1145/3360016.

Bojanowski, P., Grave, E., Joulin, A., Mikolov, T., 2016. Enriching word vectors with subword information. CoRR URL http://arxiv.org/abs/1607.04606.

Boudad, N., Faizi, R., Oulad Haj Thami, R., Chiheb, R., 2018. Sentiment analysis in Arabic: A review of the literature. Ain Shams Eng. J. 9 (4), 2479–2490. http://dx.doi.org/10.1016/j.asej.2017.04.007, URL https://www.sciencedirect.com/science/article/pii/S2090447917300862.

Dahou, A., Xiong, S., Zhou, J., Elaziz, M.A., 2019. Multi-channel embedding convolutional neural network model for Arabic sentiment classification. ACM Trans. Asian Low-Resour. Lang. Inf. Process. 18 (4), http://dx.doi.org/10.1145/3314941.

ElSahar, H., El-Beltagy, S.R., 2015. Building large arabic multi-domain resources for sentiment analysis. In: Gelbukh, A. (Ed.), Computational Linguistics and Intelligent Text Processing. Springer International Publishing, Cham, pp. 23–34.

Farghaly, A., Shaalan, K., 2009. Arabic natural language processing. ACM Trans. Asian Lang. Inform. Process. 8, 1–22. http://dx.doi.org/10.1145/1644879.1644881.

Ghoul, D., Lejeune, G., 2020. Voting classifier vs deep learning method in Arabic dialect identification. In: Proceedings of the Fifth Arabic Natural Language Processing Workshop. COLING 2020, Barcelone, Spain, URL https://hal.archives-ouvertes.fr/hal-03089957.

Hadwan, M., Al-Hagery, M., Al-Sarem, M., Saeed, F., 2022. Arabic sentiment analysis of users' opinions of governmental mobile applications. Comput. Mater. Contin. 72 (3), 4675–4689.

Heikal, M., Torki, M., El-Makky, N., 2018. Sentiment analysis of arabic tweets using deep learning. Procedia Comput. Sci. 142, 114–122. http://dx.doi.org/10.1016/j.procs.2018.10.466, URL https://www.sciencedirect.com/science/article/pii/S1877050918321689. Arabic Computational Linguistics.

Khabour, S.M., Al-Radaideh, Q.A., Mustafa, D., 2022. A new ontology-based method for arabic sentiment analysis. Big Data Cogn. Comput. 6 (2), 48.

Mikolov, T., Chen, K., Corrado, G., Dean, J., 2013. Efficient estimation of word representations in vector space. In: Bengio, Y., LeCun, Y. (Eds.), 1st International Conference on Learning Representations, ICLR 2013, Scottsdale, Arizona, USA, May 2-4, 2013, Workshop Track Proceedings. URL http://arxiv.org/abs/1301.3781.

Musleh, D.A., Alkhwaja, I., Alkhwaja, A., Alghamdi, M., Abahussain, H., Alfawaz, F., Min-Allah, N., Abdulqader, M.M., 2023. Arabic sentiment analysis of YouTube comments: NLP-based machine learning approaches for content evaluation. Big Data and Cogn. Comput. (ISSN: 2504-2289) 7 (3), http://dx.doi.org/10.3390/bdcc7030127, URL https://www.mdpi.com/2504-2289/7/3/127.

Nabil, M., Aly, M., Atiya, A., 2015. ASTD: Arabic sentiment tweets dataset. In: Proceedings of the 2015 Conference on Empirical Methods in Natural Language Processing. Association for Computational Linguistics, Lisbon, Portugal, pp. 2515–2519. http://dx.doi.org/10.18653/v1/D15-1299.

Ombabi, A.H., Ouarda, W., Alimi, A.M., 2020. Deep learning CNN–LSTM framework for Arabic sentiment analysis using textual information shared in social networks. Soc. Netw. Anal. Min. 10, 1–13.

Pedregosa, F., Varoquaux, G., Gramfort, A., Michel, V., Thirion, B., Grisel, O., Blondel, M., Prettenhofer, P., Weiss, R., Dubourg, V., Vanderplas, J., Passos, A., Cournapeau, D., Brucher, M., Perrot, M., Duchesnay, E., 2011. Scikit-learn: Machine learning in python. J. Mach. Learn. Res. 12, 2825–2830.

Pontiki, M., Galanis, D., Papageorgiou, H., Androutsopoulos, I., Manandhar, S., AL-Smadi, M., Al-Ayyoub, M., Zhao, Y., Qin, B., De Clercq, O., Hoste, V., Apidianaki, M., Tannier, X., Loukachevitch, N., Kotelnikov, E., Bel, N., Jiménez-Zafra, S.M., Eryiğit, G., 2016. SemEval-2016 task 5: Aspect based sentiment analysis. In: Bethard, S., Carpuat, M., Cer, D., Jurgens, D., Nakov, P., Zesch, T. (Eds.), Proceedings of the 10th International Workshop on Semantic Evaluation (SemEVal-2016). Association for Computational Linguistics, San Diego, California, pp. 19–30. http://dx.doi.org/10.18653/v1/S16-1002, URL https://aclanthology.org/S16-1002.

Soliman, A.B., Eissa, K., El-Beltagy, S.R., 2017. AraVec: A set of Arabic word embedding models for use in Arabic NLP. Procedia Comput. Sci. 117, 256–265. http://dx.doi.org/10.1016/j.procs.2017.10.117, URL https://www.sciencedirect.com/science/article/pii/S1877050917321749. Arabic Computational Linguistics.

Tsuruoka, Y., Tsujii, J., Ananiadou, S., 2009. Stochastic gradient descent training for L1-regularized log-linear models with cumulative penalty. In: Proceedings of the Joint Conference of the 47th Annual Meeting of the ACL and the 4th International Joint Conference on Natural Language Processing of the AFNLP. Association for Computational Linguistics, Suntec, Singapore, pp. 477–485, URL https://aclanthology.org/P09-1054.

Umair, A., Masciari, E., Habib, M., Madeo, G., 2023. Sentimental analysis of arabic tweets related to COVID-19 using AraBERT model. In: 2023 IEEE 12th International Conference on Communication Systems and Network Technologies. CSNT, pp. 966–970. http://dx.doi.org/10.1109/CSNT57126.2023.10134650.

Wadhawan, A., 2021. Arabert and farasa segmentation based approach for sarcasm and sentiment detection in arabic tweets. CoRR arXiv:2103.01679.